Dimension Guide

Fully Integrated dishwasher

ULTIMATECARE

Model:
EBS3071VXA

Dimensions

	width	height	depth
Product (mm)	448	820	550
Cut-out (mm)	450	820-870	570

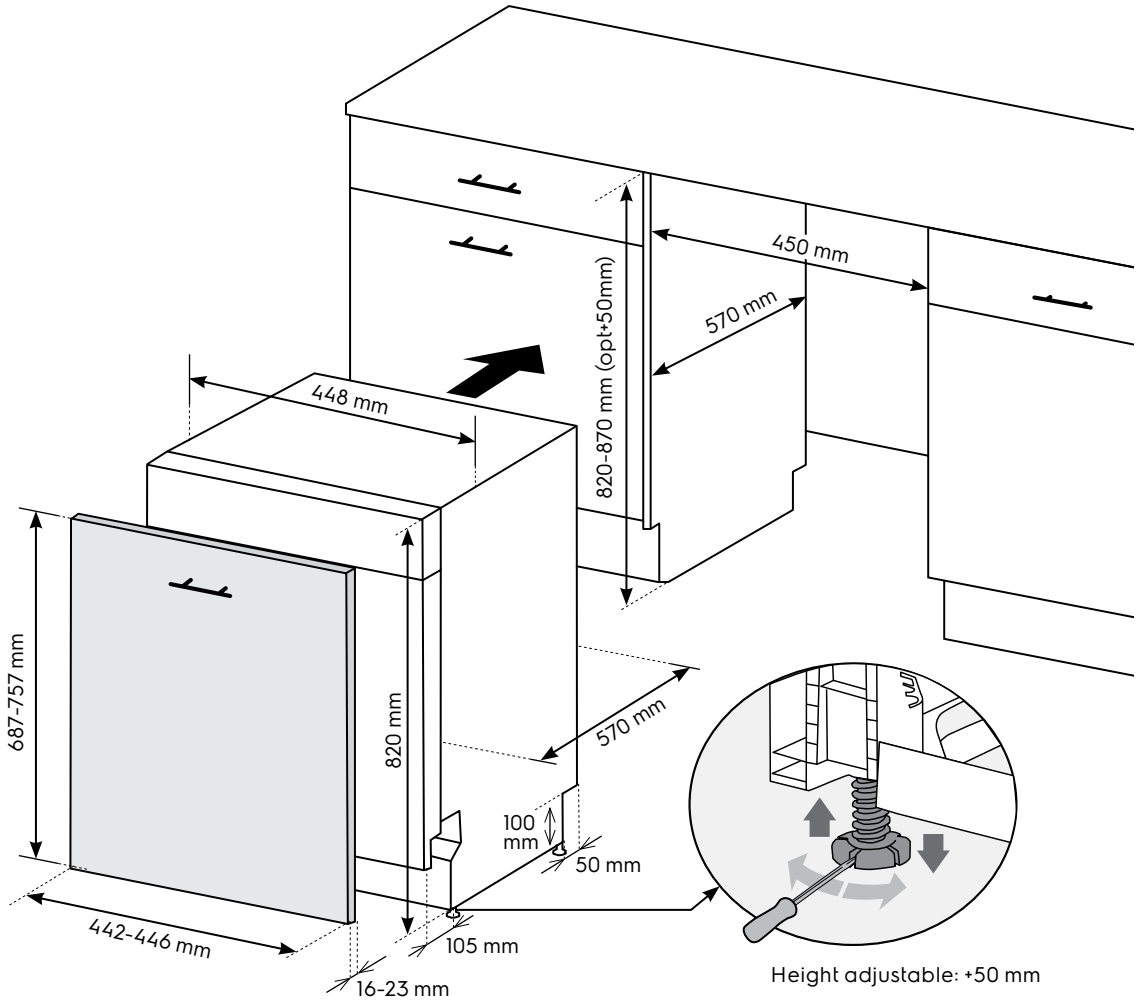

Please note! Dimensions to be used as a guide only. All customers MUST refer to the user manual supplied with the product for detailed installation instructions.

© 2025 Electrolux S.E.A PTE. LTD. ELX_DIM_EBS3071VXA_Nov25

Electrolux